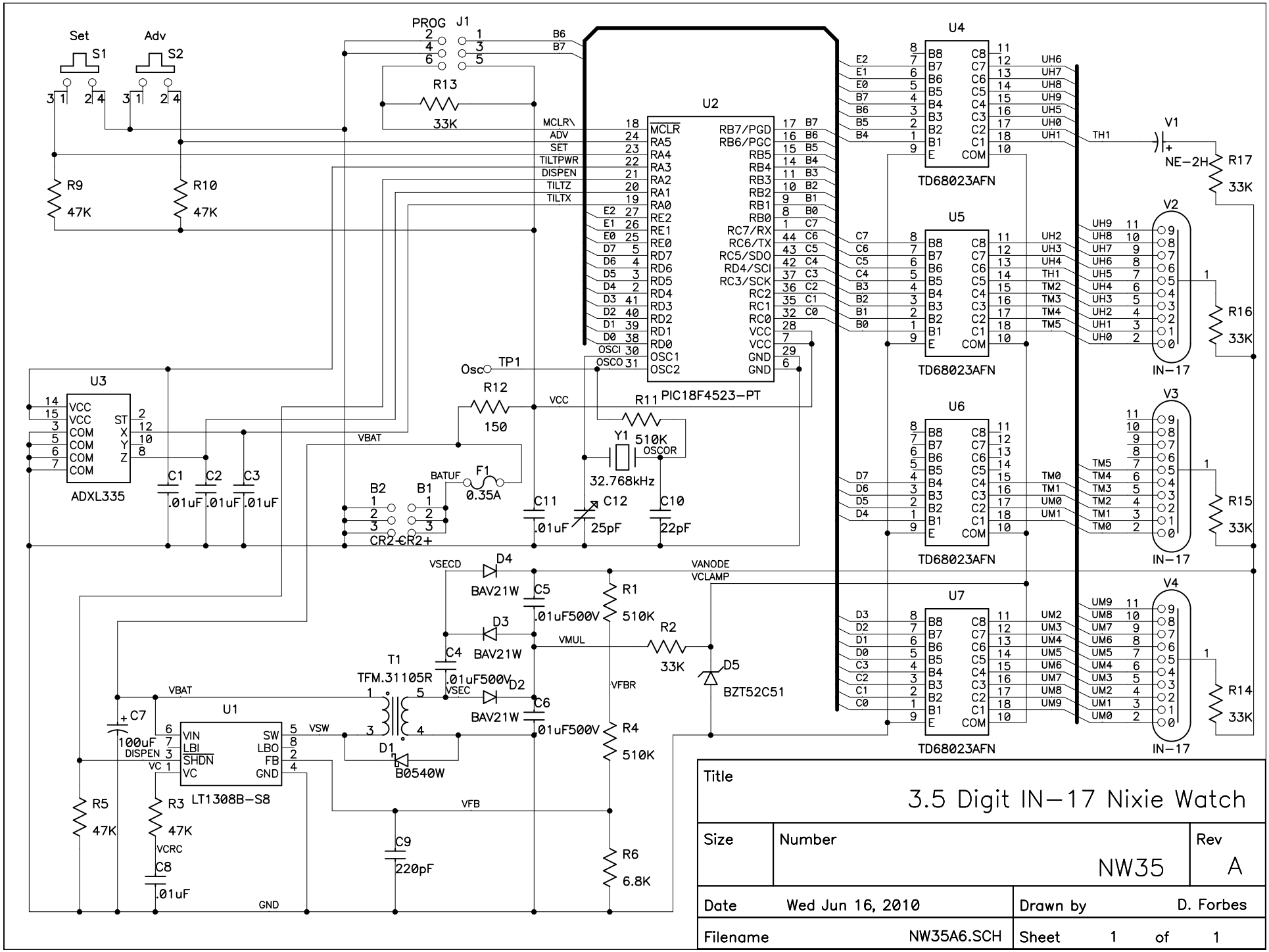

Title	3.5 Digit IN-17 Nixie Watch		
Size	Number NW35		Rev A
Date	Wed Jun 16, 2010	Drawn by	D. Forbes
Filename	NW35A6.SCH	Sheet 1 of 1	