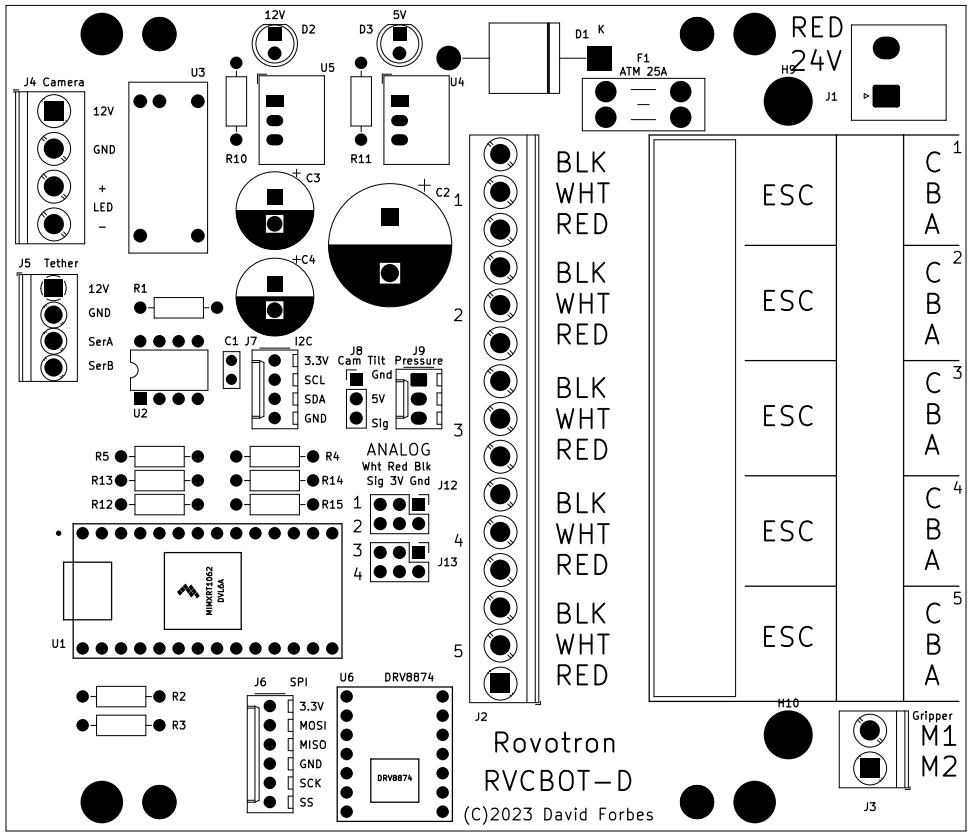

Cathode Corner

Sheet:

File: RVCBOT−D.kicad_pcb

Title: Rovotron Cadet Bottom Board

Size: USLetter	Date:	**Rev: B**
KiCad E.D.A. kicad 7.0.6		Id: 1/1